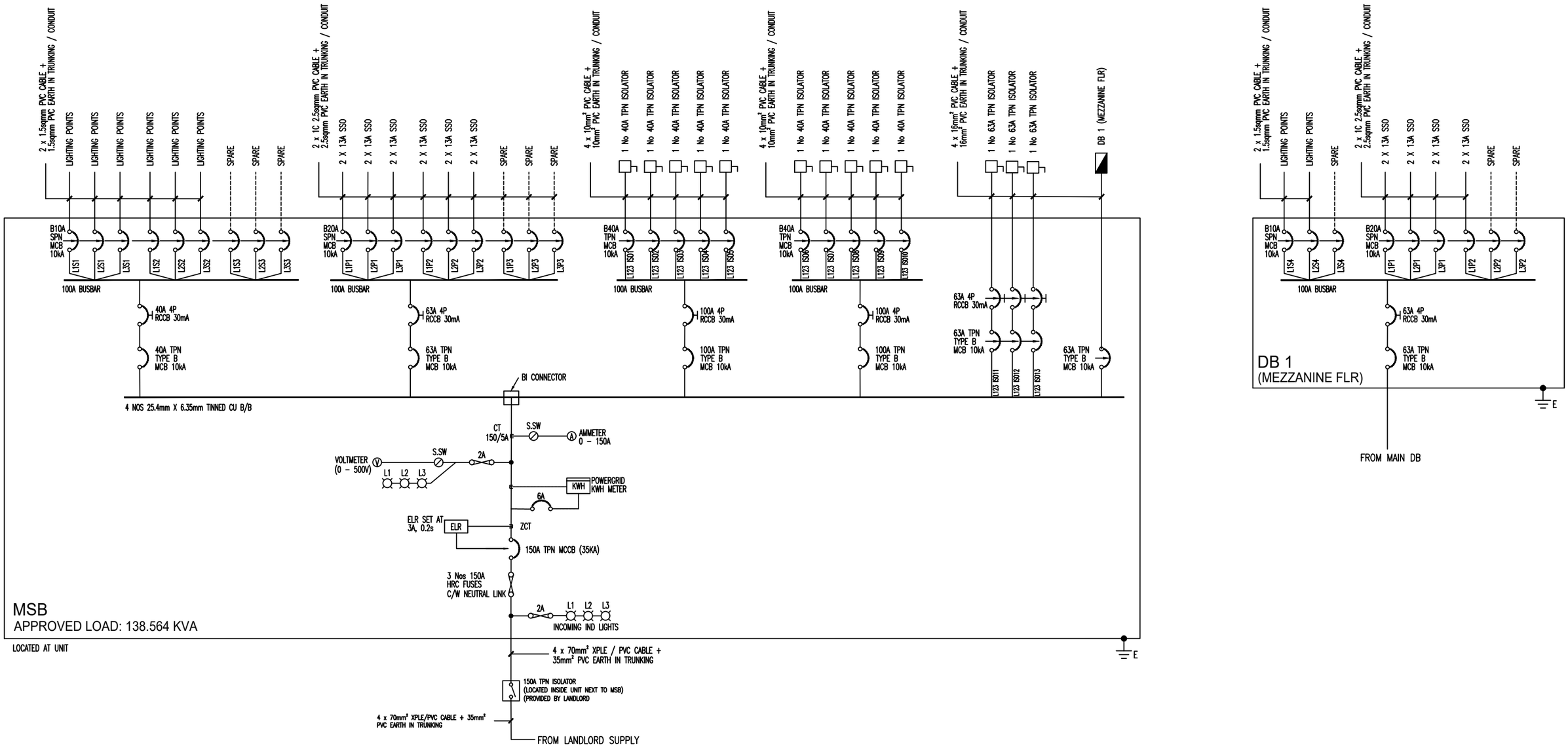

CLIENT / ADDRESS :	MAIN CONTRACTOR :	ELECTRICAL CONTRACTOR :	DRAWING TITLE :	LEW :	CHECKED :	DATE :
C K TEAM ENGINEERING PTE LTD 9 TUAS SOUTH AVE 10 #05-05 SINGAPORE 637291			SINGLE LINE DIAGRAM (SLD)	TAN KUI LI EMA Licence No. : 8/35076		21 JUL 2025
					DRAWING NO. : BF/240129/SL/01	REV : 1